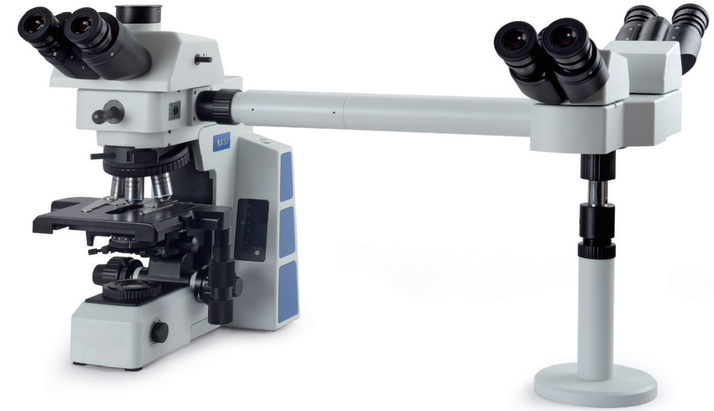

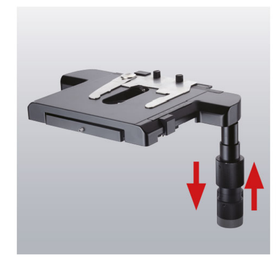

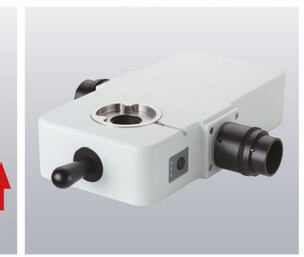

RX50DO3/RX50DO5 biological microscope

● With the technical breakthrough of Sunny microscopes, humanized interactive discussion on science research, pathology and education is available. With excellent optical system and ergonomic design, RX50DO3/RX50DO5 is the best microscope for life science research, such as cytology, parasitology, oncology, immunology, euphenics etc.

Focus on group discussion

● RX50DO3/RX50DO5 is specially developed for group discussion. A main head with 4 sub heads, 5 people at most can observe at the same time. High configuration and stable frame, achieve to easy and comfortable operation.

Flexible combination and outstanding stability

● New designed stage adopts two-way wire slide rail. With 187mm X 166mm big size and extensible adjusting handle, long time operation is available.

● With illumination adjusting knob and digital dimming screen on the frame, the light intensity is controllable and displayable. Intensity reset button is preset on 8V which is the best voltage for photograph.

● 360° rotatable viewing tube for different viewing position, is more flexible and comfortable.

Optional accessories

● Middle module with LED cursor, using to indicate the same image on main head to the observers using sub heads, is helpful to improve the teaching quality and study efficiency.

● Main head with trinocular tube can be connected with digital camera. It is available to share the micro image to more people by camera outputting to computer and projector, which is very important to scientists and doctors for study interaction.

● The operating parts of RX50DO3/RX50DO5 adopting skin-touch material, according with ergonomics, is helpful to reduce irritation for human temperature, increase friction and antistatic ability. Frame of RX50DO3/RX50DO5 adopting special surface treatment, prevents it from corrosion and wear.

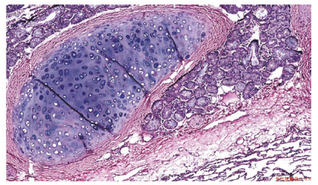

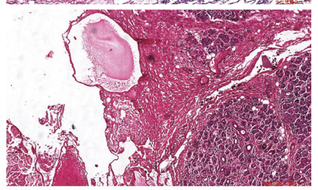

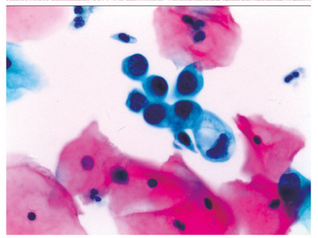

Optical system	Infinity color corrected optical system
Viewing head	Main head: 30° inclined trinouclar viewing head, interpupillary distance: 50mm–76mm. splitting ratio binocular: trinocular=100:0/20:80/0:100.
	Sub head: 30° inclined binocular viewing head, interpupillary distance: 54mm–75mm.
	5–35° tilting trinocular head, interpupillary distance: 50mm–76mm. splitting ratio binocular: trinocular=50:50/100:0/0:100
Eyepiece	High eye-point wide field plan eyepiece PLN10X/22mm, diopter adjustable.
	High eye-point wide field plan eyepiece PLN10X/22mm with stop screw, diopter adjustable.
Objective	Infinity plan semi apochromatic fluorescent objectives 4X/10X/20X/40X/100X
	Universal plan semi-apochromatic objectives 2X/4X/10X/20X/40X/60X/100X
	Universal plan semi-apochromatic phase contrast objectives 4X/10X/20X/40X/60X/100X
Nosepiece	Quintuple nosepiece with DIC slot
	Sextuple nosepiece with DIC slot
	Septuple nosepiece with DIC slot
Middle module	Middle module with LED cursor, three colors red/green/blue for option, intensity adjustable.
Frame	Biological transmitted frame, with low-hand coaxial focusing system with upper limit and tension adjustment; coarse range: 25mm, fine precision: 0.001mm.Built-in 100V–240V wide range voltage, with digital dimming and intensity set & reset; built-in LBD/ND6/ND25 filters
Stage	187mm X 166mm double layers mechanical stage, moving range: 80mm X 55mm, precision: 0.1mm;two ways wire slide rail, knob tension adjustable.
Condenser	Swing-out achromatic condenser, N.A.0.9
	Universal condenser
Illumination	12V/100W halogen, bulb center preset, intensity adjustable
Camera adapter	0.5X, 0.65X, 1X focusing C-mount
Other accessory	External transformer, High precision micrometer

RX50DO3/RX50DO5 Dimensions: mm

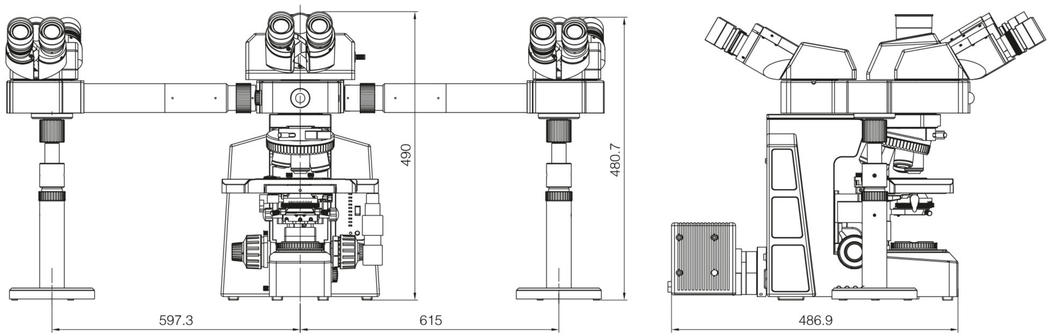

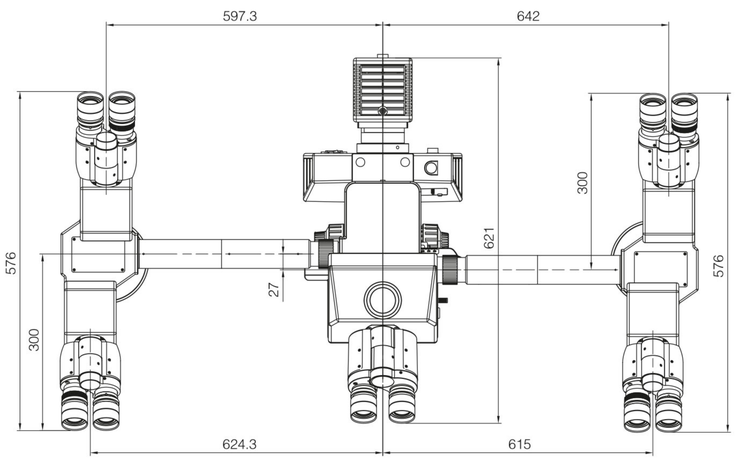

RX50DO3
RX50DO5

Biological Microscope(Multi-observer)